Morse Watch / Timer kit

Jackson Harbor Press
1418 Foss Rd.
Washington Island, WI 54246
http://wb9kzy.com
wb9kzy@wb9kzy.com

Schematic

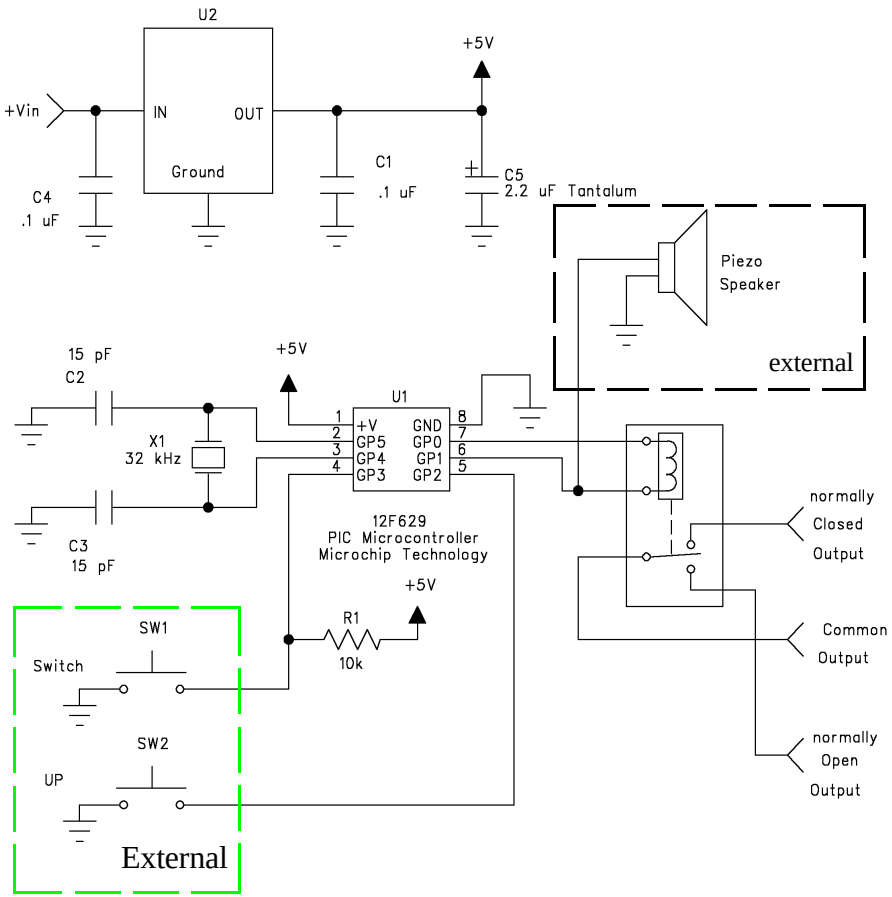

Circuit Board Top View

Parts Placement Diagram

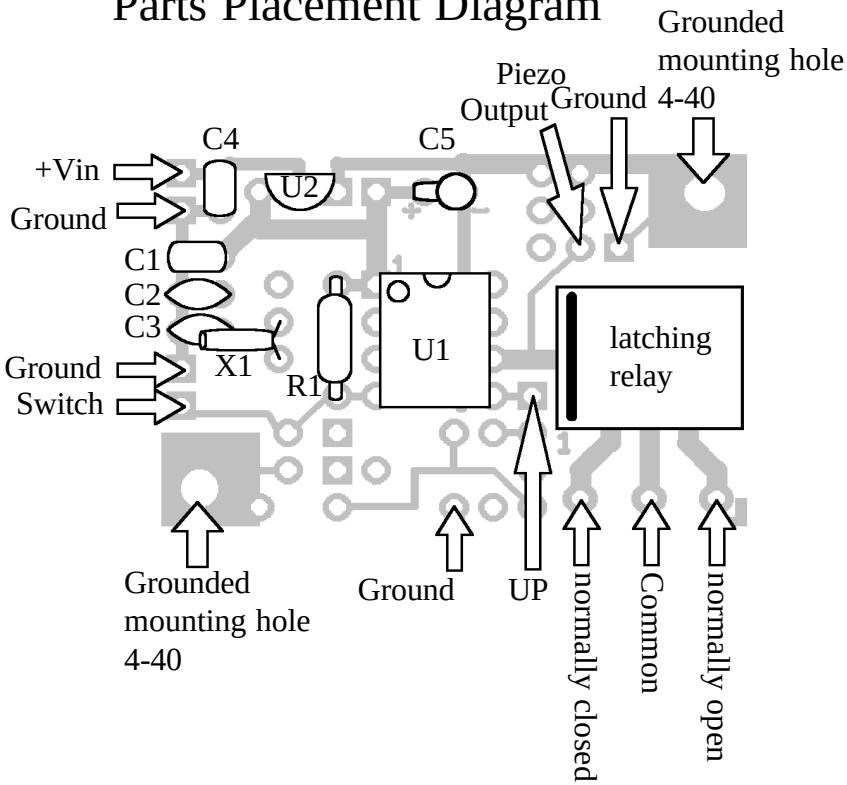

Circuit Board Bottom View

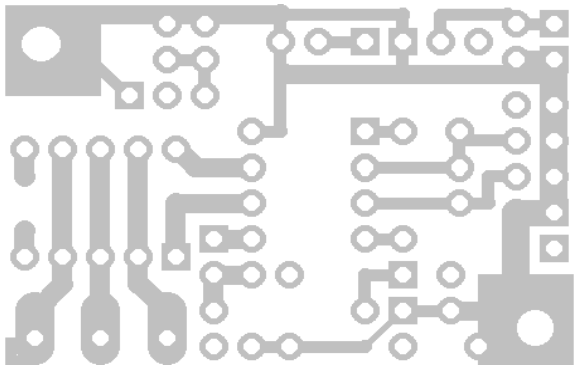

Copyright © 2011 by Charles J. Olson